05

TRAFFIC BARRIERS

Traffic barriers are a solution designed for the protection of people, infrastructures, machinery, and for the demarcation of moving vehicles.

Le barriere antiurto sono una soluzione studiata per la protezione di persone, infrastrutture, macchinari e per la delimitazione di veicoli in movimento.

Les barrières de circulation sont une solution conçue pour la protection des personnes, des infrastructures, des machines et pour la délimitation des véhicules en mouvement.

Las barreras antigolpes para vehículos son una solución diseñada para la protección de personas, infraestructuras, maquinaria y para la delimitación de vehículos en movimiento.

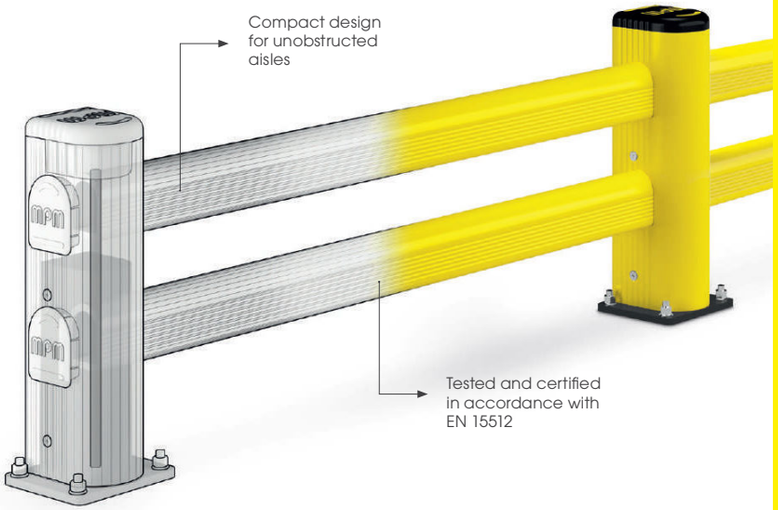

LM MODULAR

SM Modular	**LM** Modular	**LINK SINGLE** Modular	**LM/1 LINK** Modular	**LINK LM** Modular
Light Load	Heavy Load	Heavy Load	Heavy Load	Heavy Load
Height: 350 mm	Height: 420 mm	Height: 500, 800 mm	Height: 420 mm	Height: 500, 800 mm
Standard Module: 250 - 1500 mm (250 increments)	Standard Module: 250 - 2000 mm (250 increments)	Standard Module: 500 - 2000 mm (250 increments)	Standard Module: 500 - 2000 mm (250 increments)	Standard Module: 500 - 2000 mm (250 increments)
Fixing: Included	Fixing: Included	Fixing: Included	Fixing: Included	Fixing: Included
Colour:	Colour:	Corner: External Available	Corner: External Available	Corner: External Available
		Colour:	Colour:	Colour:

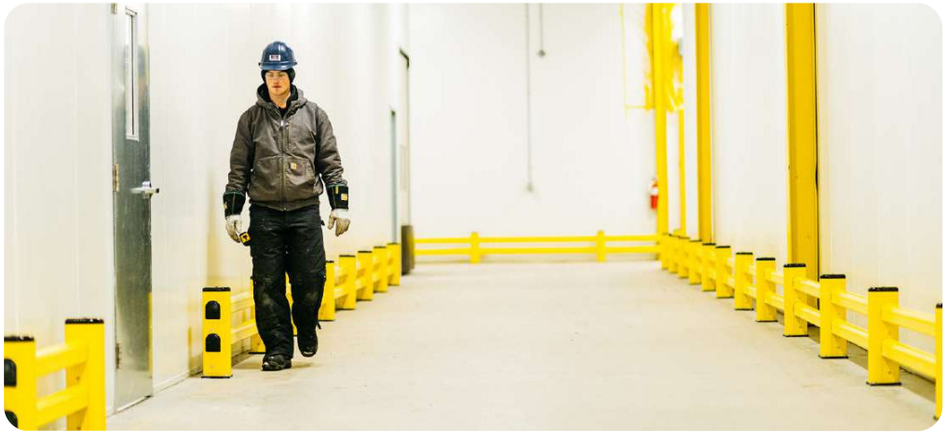

BFLEX MODULAR

BFLEX.FRONT/1 Modular	**BFLEX.COM/1** Modular
Heavy Load	Heavy Load
Height: 450 mm	Height: 450 mm
Standard Module: 750 - 2000 mm (250 increments)	Standard Module: 750 - 2000 mm (250 increments)
Fixing: Included	Fixing: Included
Colour:	Corner: Available
	Colour: